Rocketry Projects Conducted at the University of Cincinnati 2009-2010

Grant Schaffner, Ph.D. (Advisor)
Rob Charvat (Student)

17 September 2010

Spacecraft Design Course Objectives

- Students gain experience with:
  - Project management
  - Space systems engineering
  - Design, analysis, construction, test, operations
  - Fund raising
  - Real world problem solving

Project Management

- Project Definition
- Project Planning
- Project Implementation
- Project Communication

Systems Engineering

- Requirements
- Validation
- Verification
- “V” Model

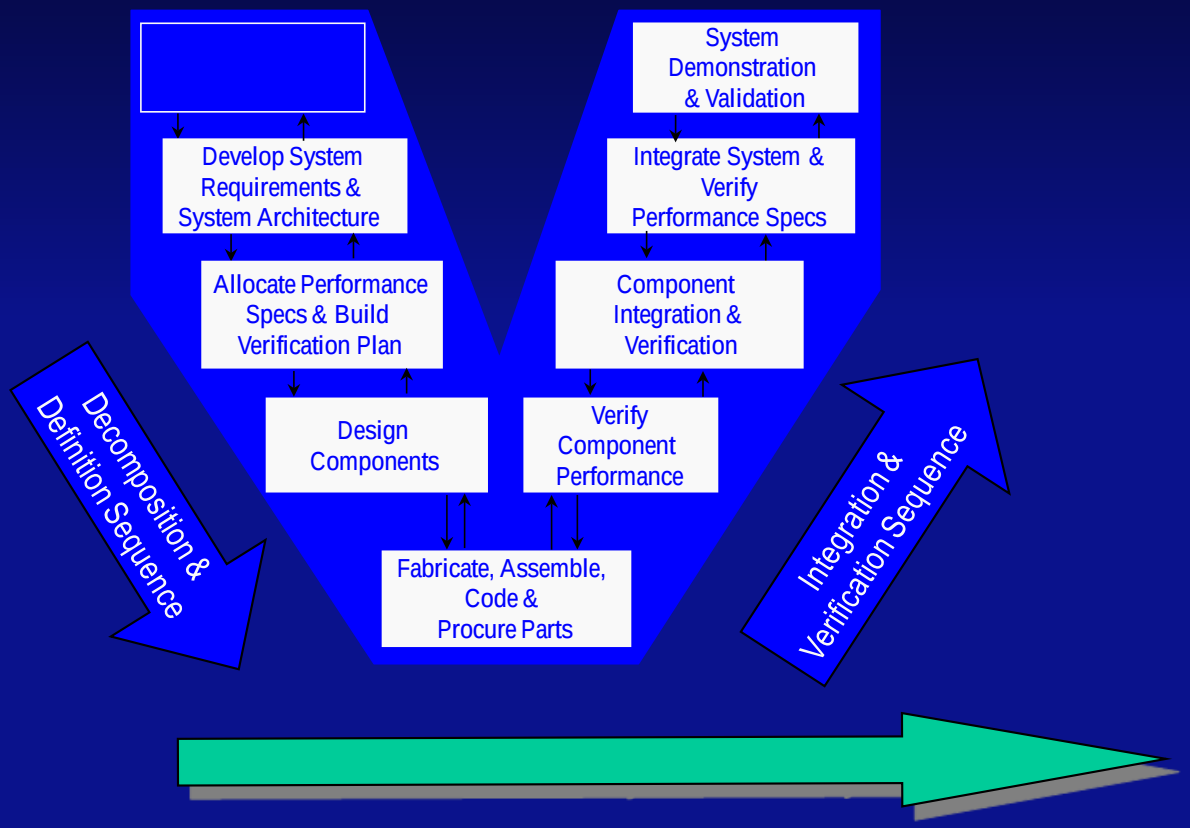

Source: NASA Space Systems Engineering Course, L. Guerra, 2008

Design, Analysis, Construction, Test

- Application of methods and principles previously learned in a realistic environment with technical, budget, and schedule constraints

Fund Raising

- Students took the primary role in finding funding sources and writing proposals

Real World Problem Solving

- Risk Assessment
- Anticipating problems and opportunities
  - Planning responses ahead of time and setting triggers

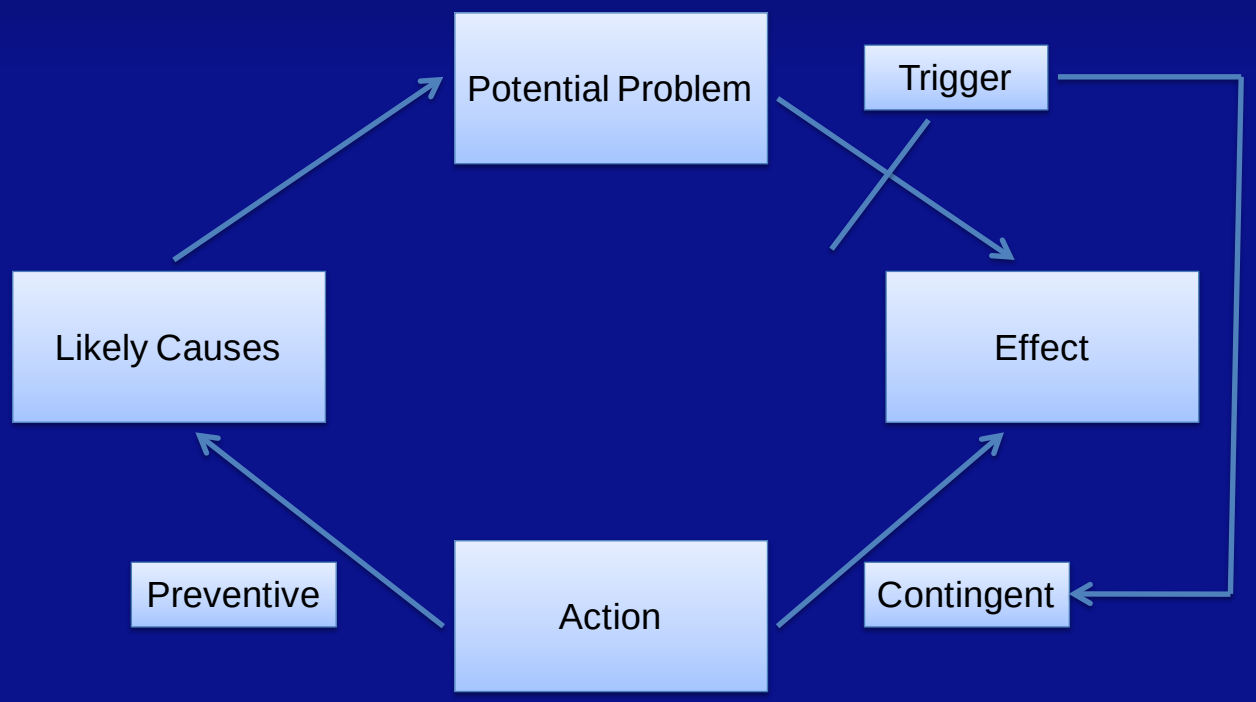

Project & Competition

Competition Overview

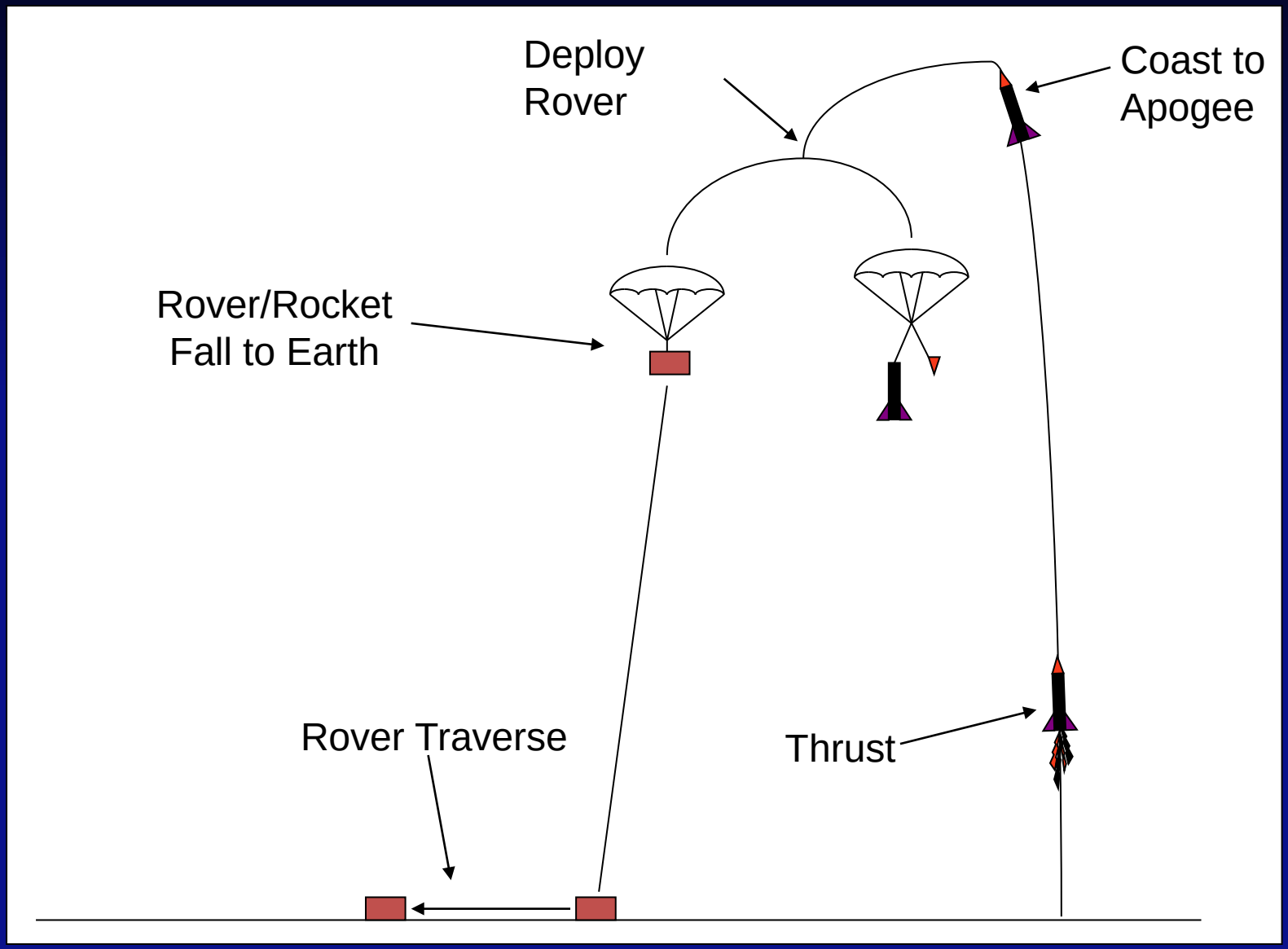

Competition Requirements

- Rocket must
  - Reach a minimum altitude of 1000 ft
  - Completely house rover
  - House at least a single Perfectflite A15K Rev 2 recording altimeter
- Rover must
  - Deploy and descend safely without freefall
  - Place a marker at point of touchdown
  - Traverse a minimum displacement of 3 meters from touchdown marker

Integrated Rocket/Rover Design

Rocket Dimensions

- 4’8” tall
- 6 inches diameter
- 13 lbs with rover

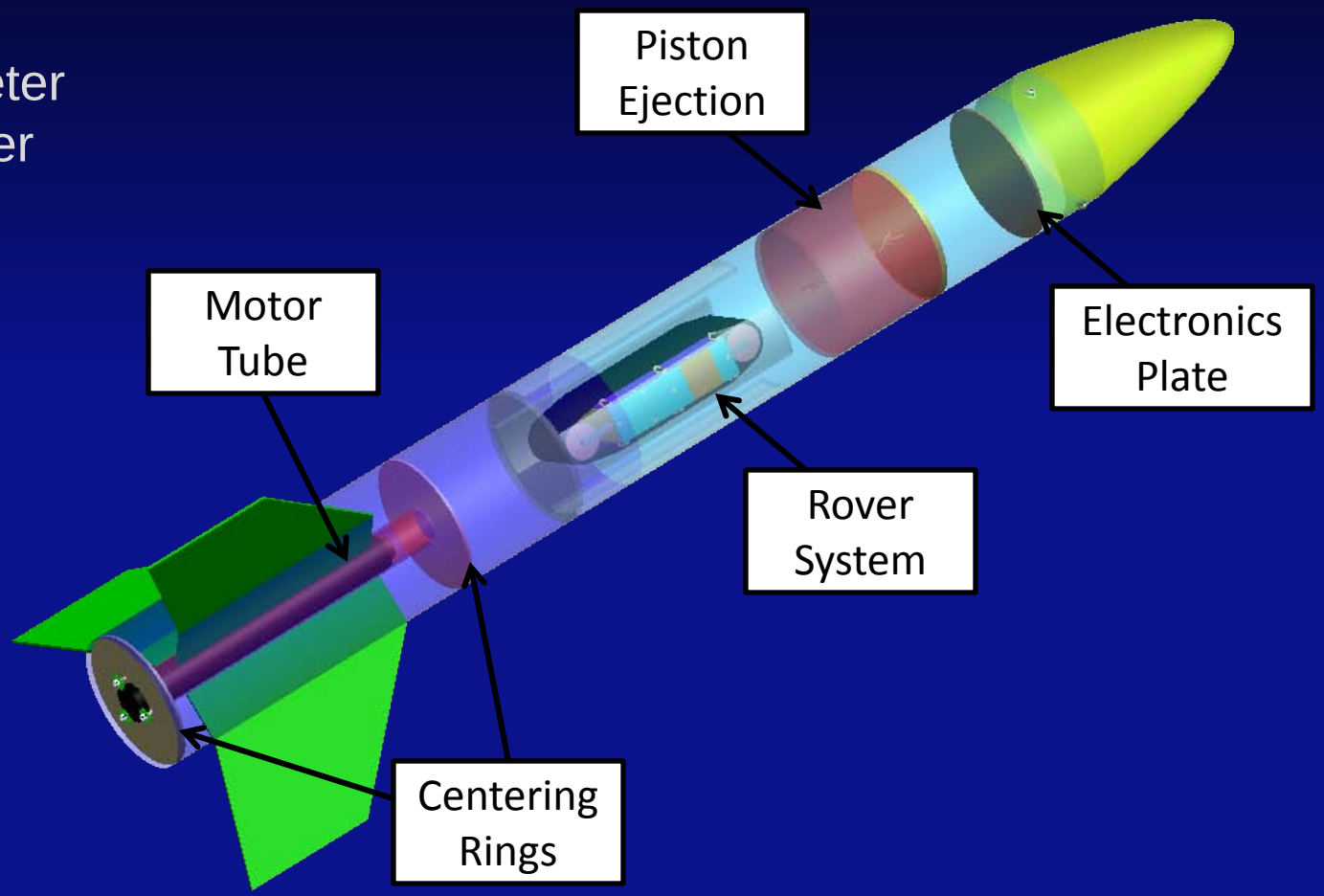

Rocket Body Separation

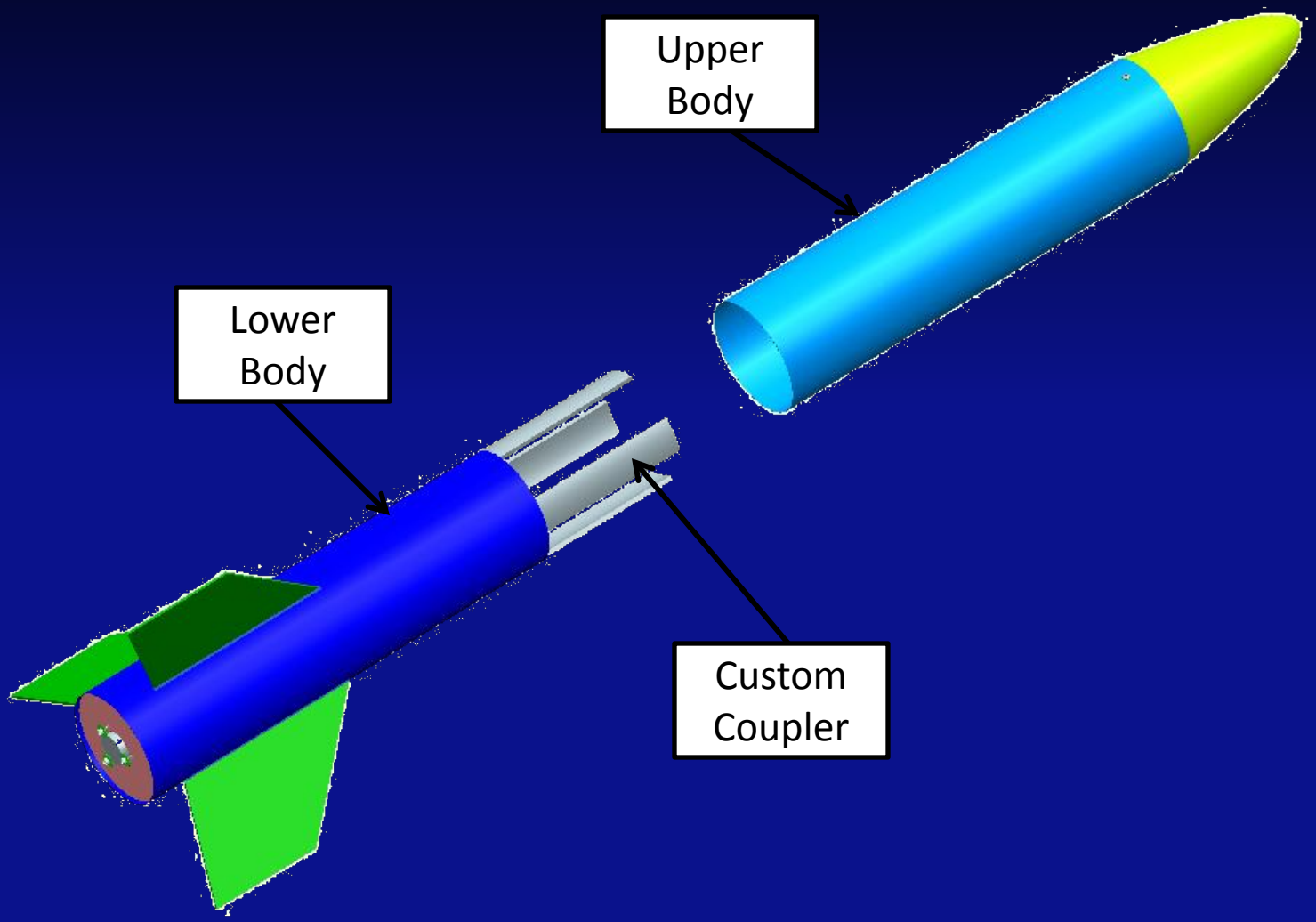

Propulsion System

- Aerotoch I-600R Motor
- Simulation Results
  - Calm conditions: 0-2 mph winds
  - Max Altitude of 1712 ft.
  - Max Velocity of 382 ft/sec
  - Range of 205 ft.
- Competition flights, altitude reached:
  - 1346 ft., 1348 ft., and 1372 ft.
  - Discrepancy in simulation and actual flights due to increase in weight during fabrication and winds higher than 0-2 mph at competition

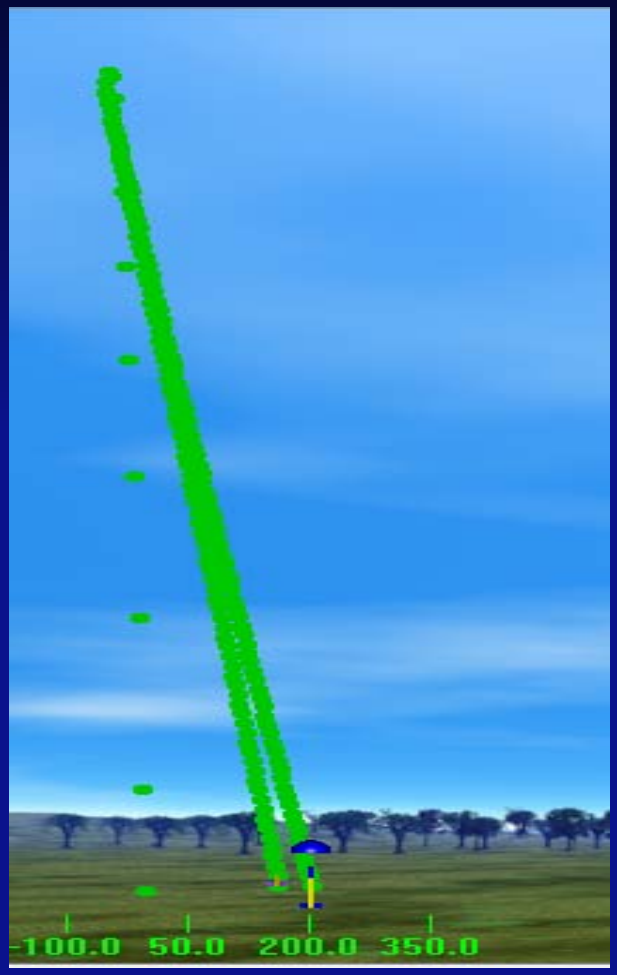

Rocket Fabrication

Rocket Fabrication

Completed Rocket

Rover Concept

- Based on a World War I tank concept
- Treaded vehicle with a single drive wheel
- Tensioned guide wheel
- Lightweight frame to allow for robust electronics system
- Original design used GP03 fiber glass with aluminum supports for the frame
- 4 in. x 10.5 in. (with wheels) x 2 in.

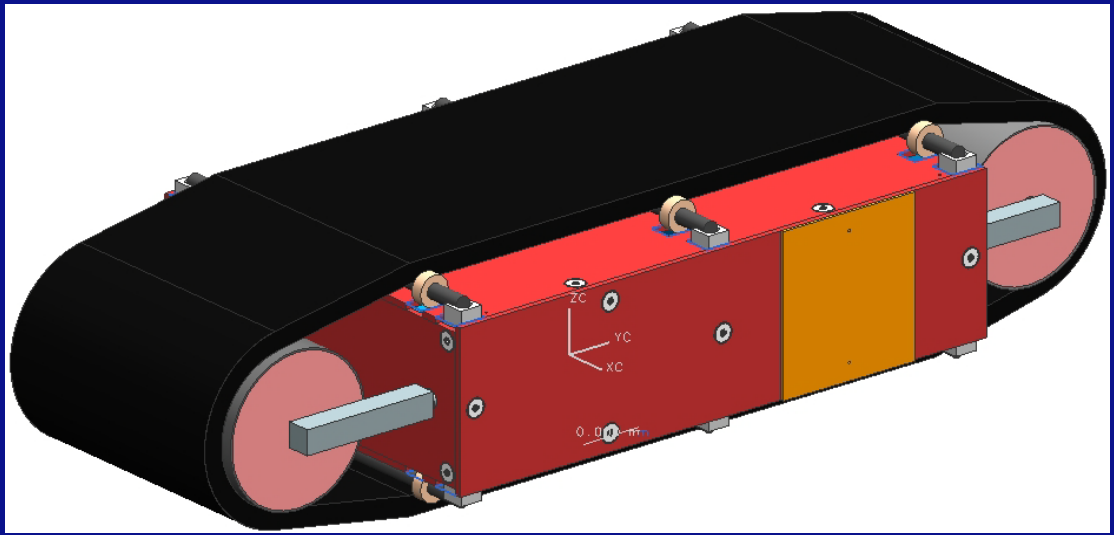

Locomotion

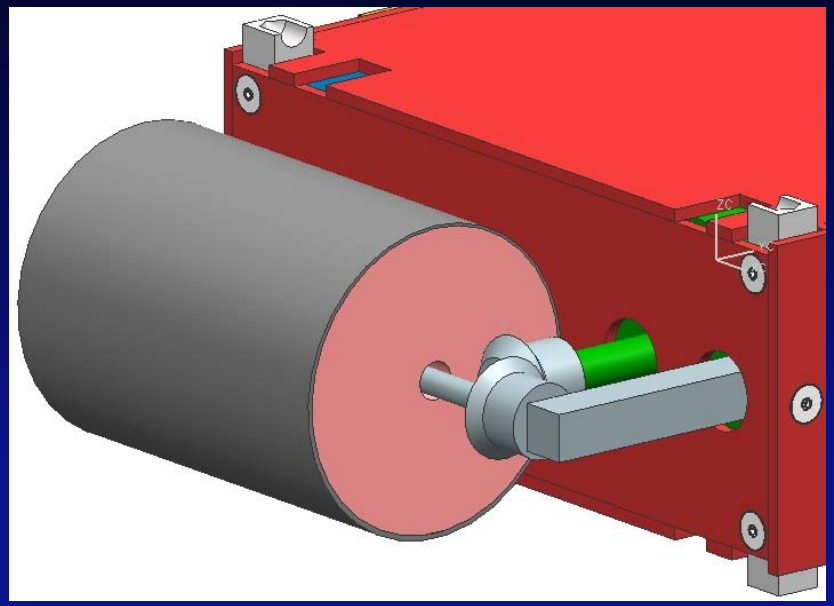

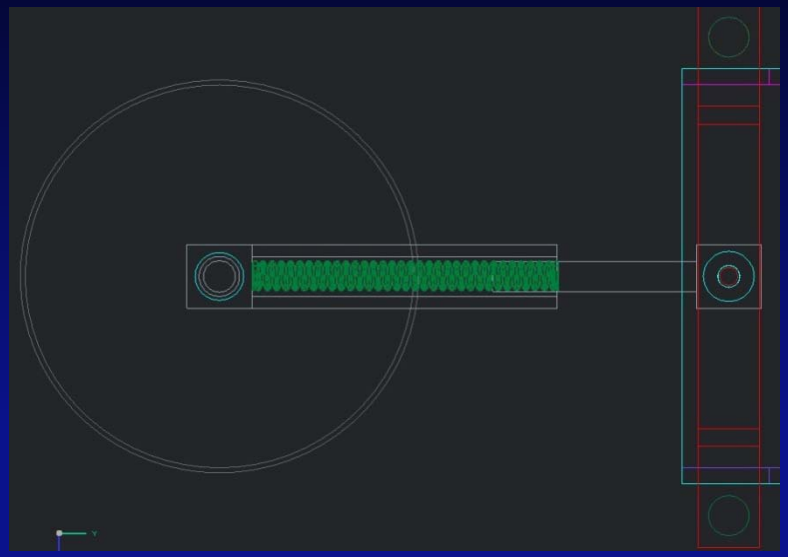

Tread Drive Wheel

- Translates motion from the gear box to the drive wheel via miter gears
- Drive wheel axle is potted in the drive wheel using epoxy.

Tensioned Guide Wheel

- Springs provide about 12 lbs. tension force on the tread
- Tensioned system relies on friction to move the tread

Rover Control Components

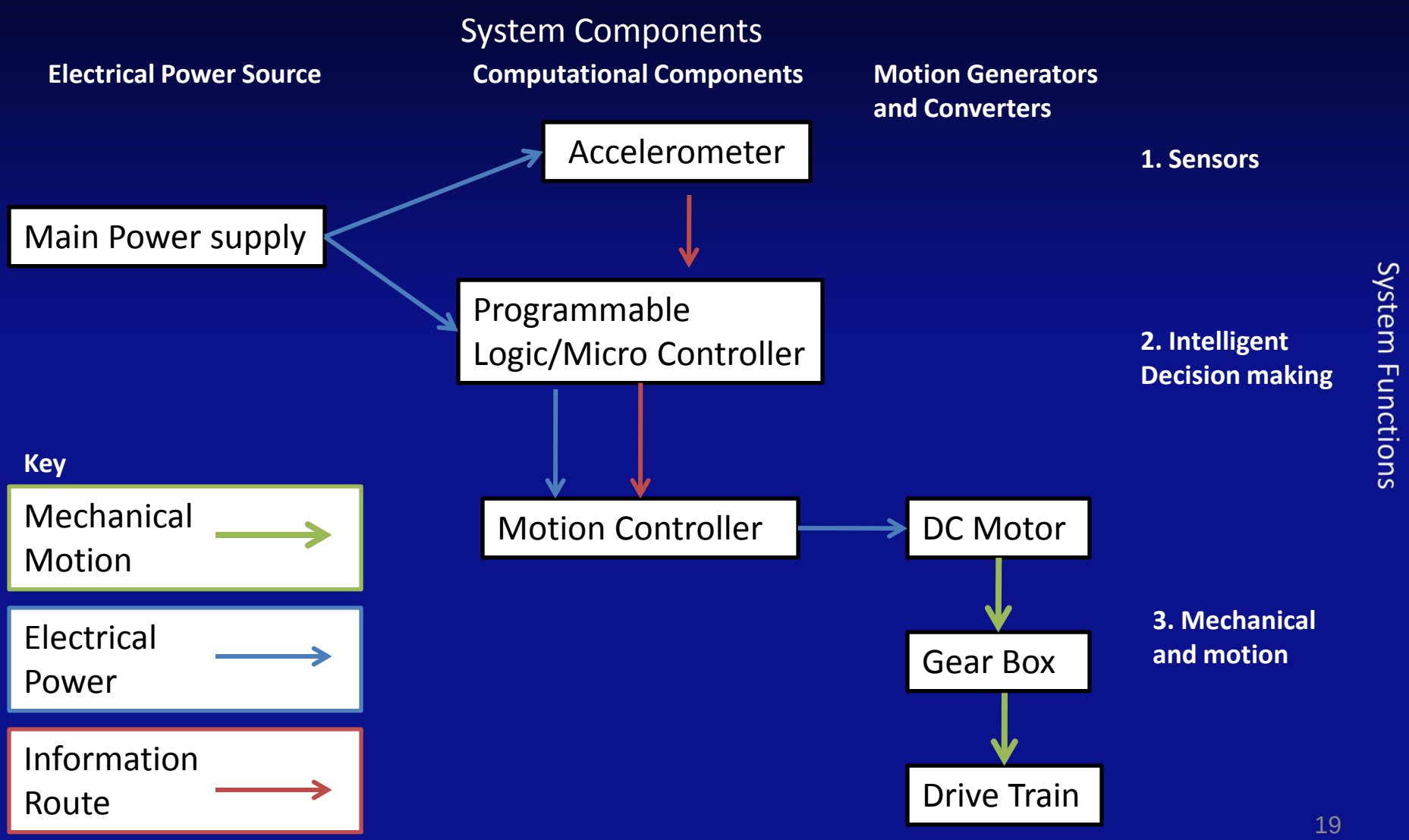

Electronics Layout

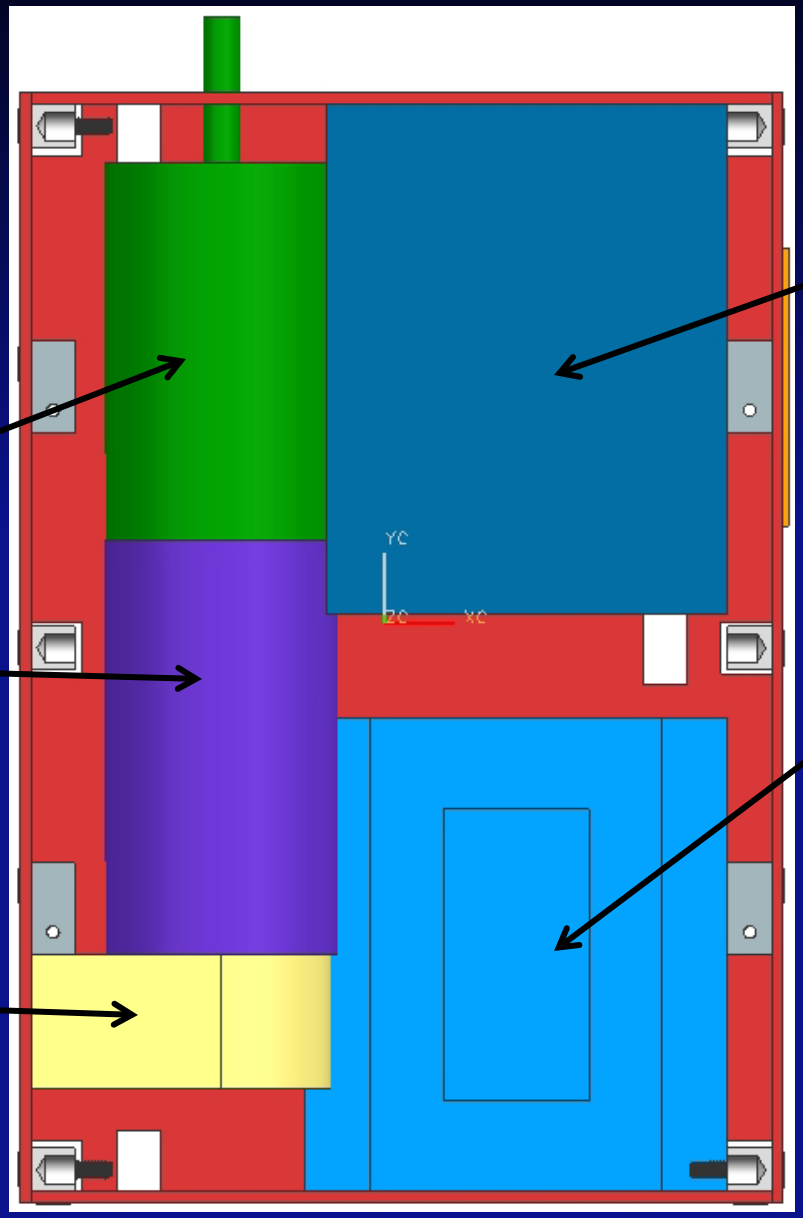

Release Mechanism

- Nichrome wire was used to release the parachute and beacon
- Nichrome was coiled around the chords
- Op-amp restricted current from battery to wire

Rover Electronics System

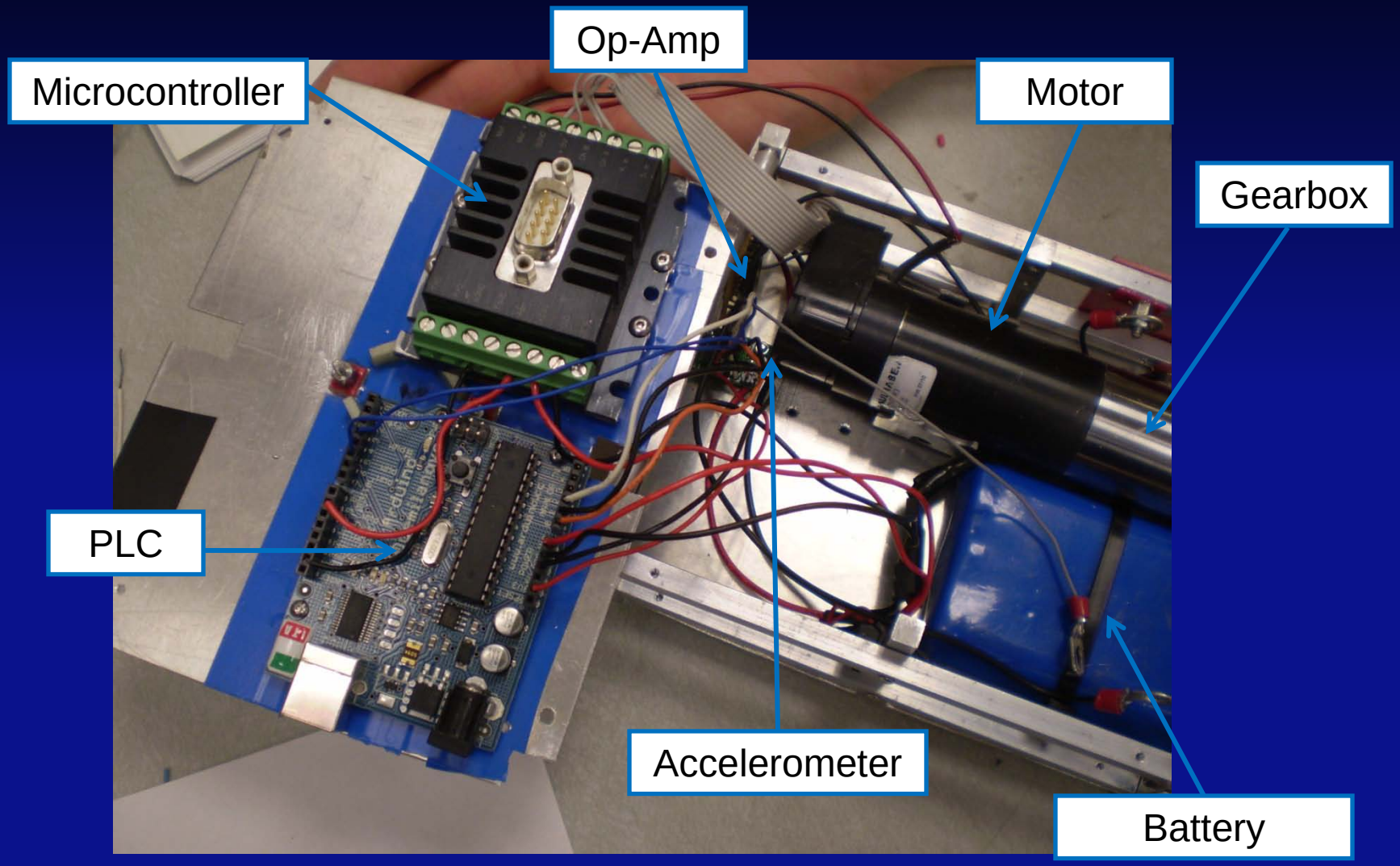

Completed Rover

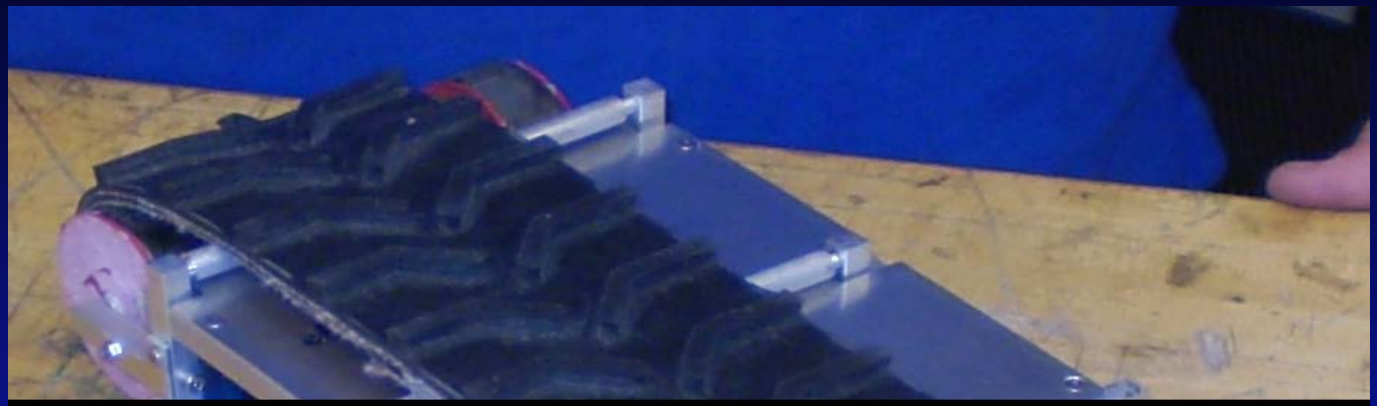

Rover Test

Launch Manifest

Date	Location	Rocket Name	Payload	Successful	Reason
3/6/2010	Elizabethtown	Icarus	Dummy	Yes	Maiden Flight
3/27/2010	Elizabethtown	Icarus	Rover	Yes	Test Rover Parachute Release
3/27/2010	Elizabethtown	Icarus	Rover	No	Test Rover Flight
4/8/2010	Culpeper	Dr. Khosla	Dummy	No	Maiden Flight
4/9/2010	Culpeper	Dr. Khosla	Rover	Marginal	Competition Flight
4/9/2010	Culpeper	Dr. Khosla	Rover	Marginal	Competition Flight
4/9/2010	Culpeper	Dr. Khosla	Rover	Marginal	Competition Flight

Competition Flight (Artemis)

Results

- Rocket with rover crashed at a test launch 1 week before competition
- Had a backup rocket ready to use
- Used same electronic system on an off-the-shelf rover for competition
- At competition, no teams met the requirements. UC Prime had a successful launch and deployment and the beacon was released upon landing, but the rover didn’t move

Lessons Learned

- A design is rarely left unchanged throughout fabrication
- Expect problems with your design and plan accordingly
- Redundancy, redundancy, redundancy
  - High probability of catastrophic failure
- Testing is crucial to expose flaws or weaknesses in design

Acknowledgements

- Team UC Prime
  - Rob Charvat
  - Brooks Clark
  - Branden Lawless
  - Chris McGlown
  - Andy McKenna
  - Alex Starr
  - Adam Thurn
- Team Artemis
  - Nathanial R. Woggon
  - Charles P. Williams
  - Jacob C. Ickes
  - Phil J. Italiano
  - Justin E. Niehaus
  - Andrew C. St. George
  - Akshay R. Wadekar

- Ohio Space Grant Consortium
- University of Cincinnati
- Quartus Engineering Inc.