Introduction to Aerospace Engineering
A Freshman-level Course in Rocketry and Satellite Design

UNIVERSITY OF ILLINOIS
AT URBANA-CHAMPAIGN

AE 100: Introduction to Aerospace Engineering

- Objective: Introduce incoming freshman students to aspects of aerospace engineering giving them hands-on problem solving design and data collection experience
- Currently: two sections
  - Spacecraft and rocket design
  - Aircraft design

AE 100: Rocket and Spacecraft Design

- Introduction to model rocket design, building and launch
- Satellite (12 ounce CanSat) subsystems
- Introduction to circuitry, electronics and soldering
- Rocket trajectory – Theory and numerics
- Solid propellant rockets: combustion and manufacturing
- Space mission design
- Working as a team
- Engineering ethics
- How to write a technical report?

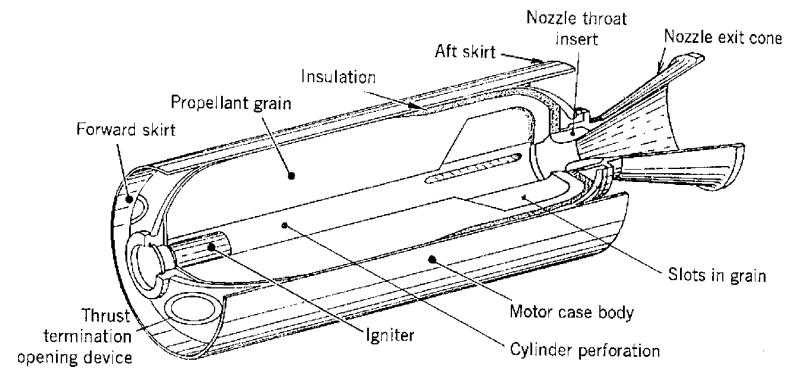

Fig. 11–1. *Simplified perspective quarter-section view of a typical solid propellant rocket motor with a case-bonded, perforated grain and a fixed nozzle. The cylindrical case with its forward and aft domes basically forms a pressure vessel. (Adapted with permission from Reference 11–1.)*

Circuit soldering

Rocket construction

Payload Section: Mechanical Components

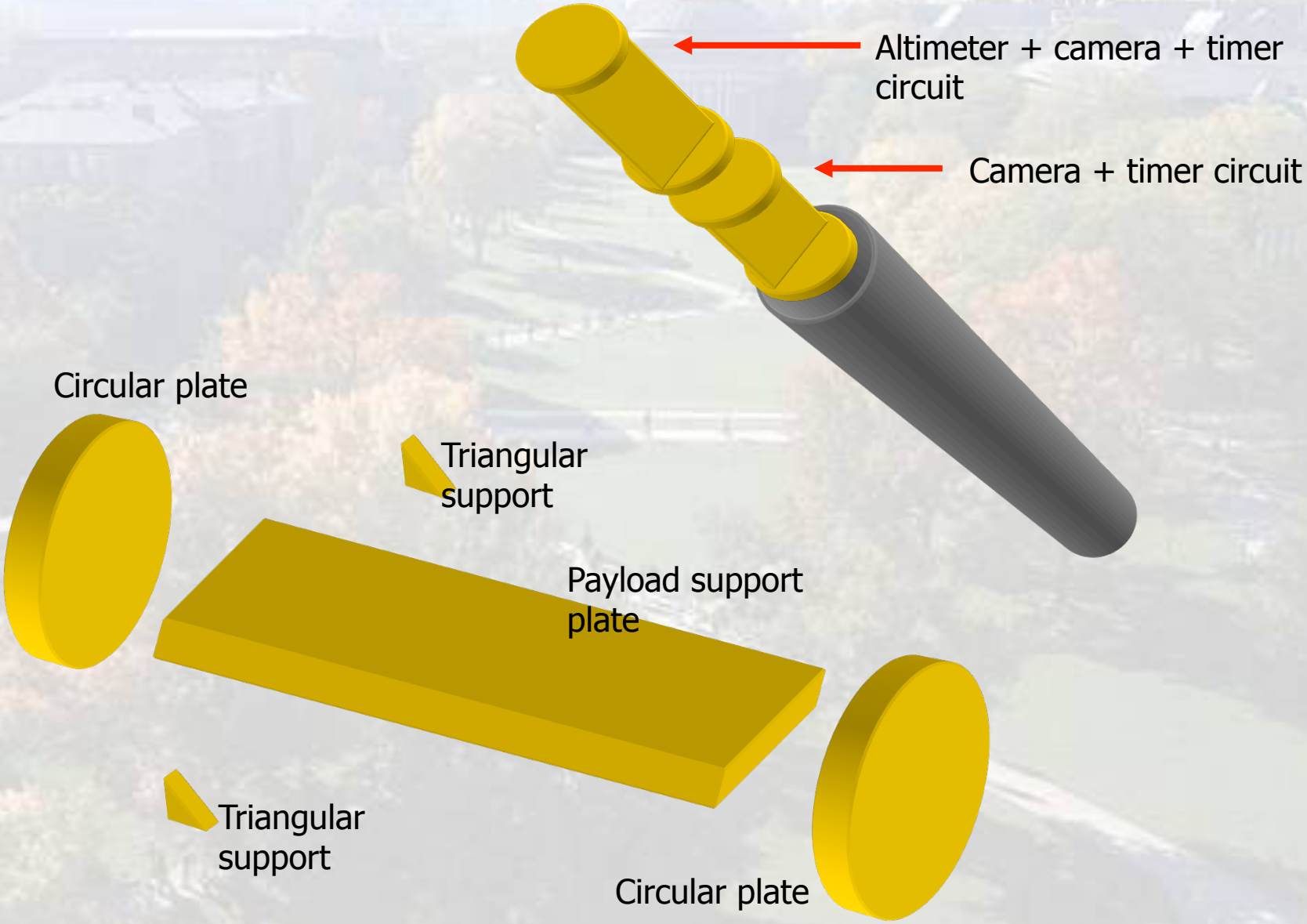

Payload Section: Electronics

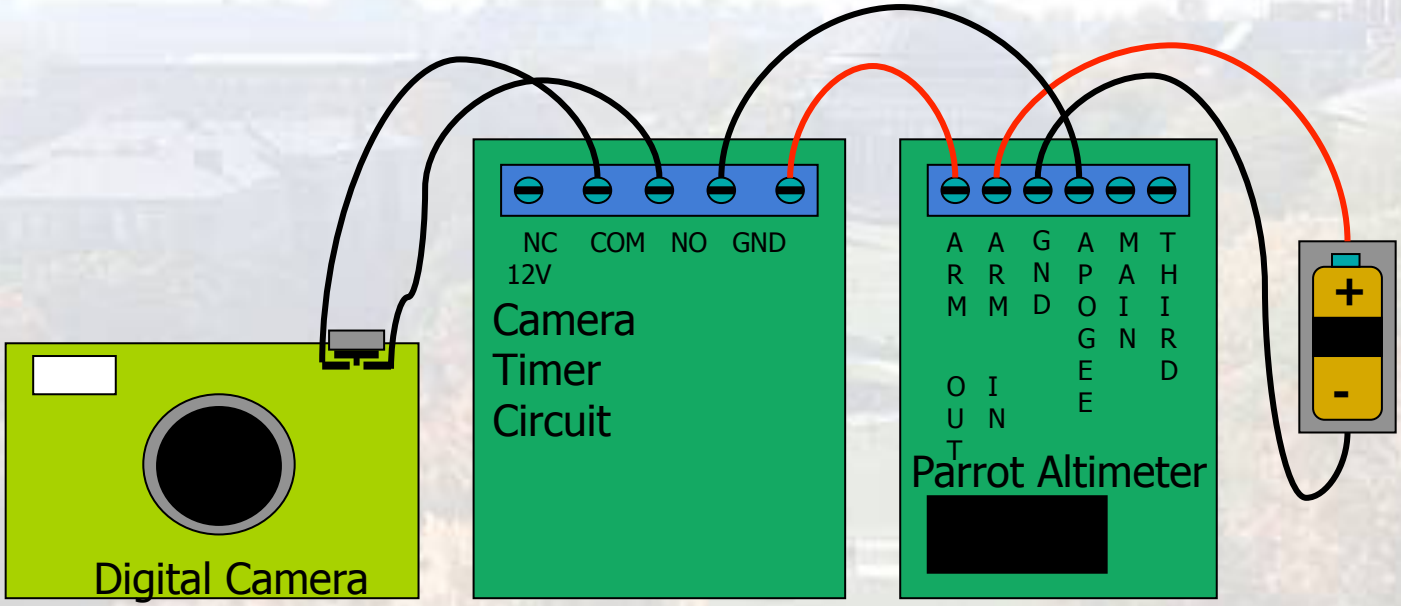

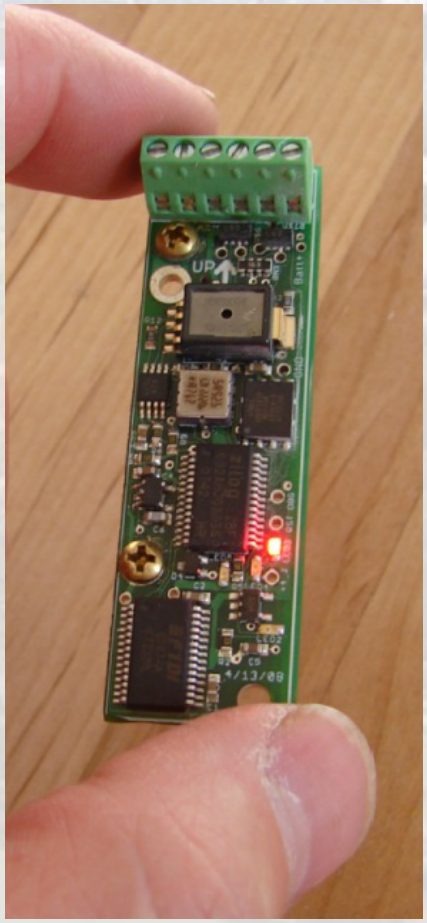

Parrot altimeter

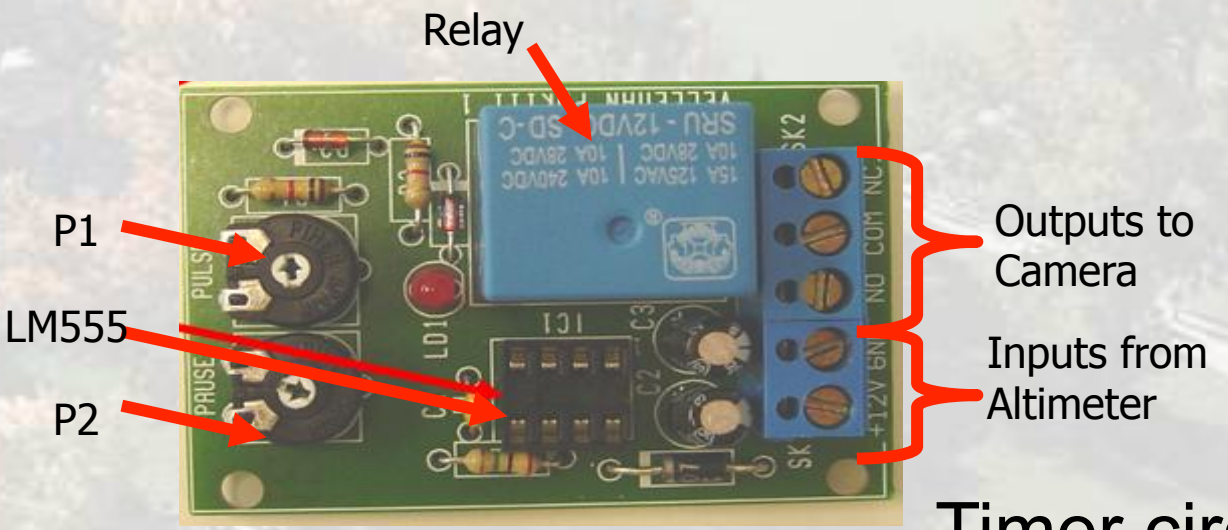

Timer circuit

Launch Day

In-Flight Pictures

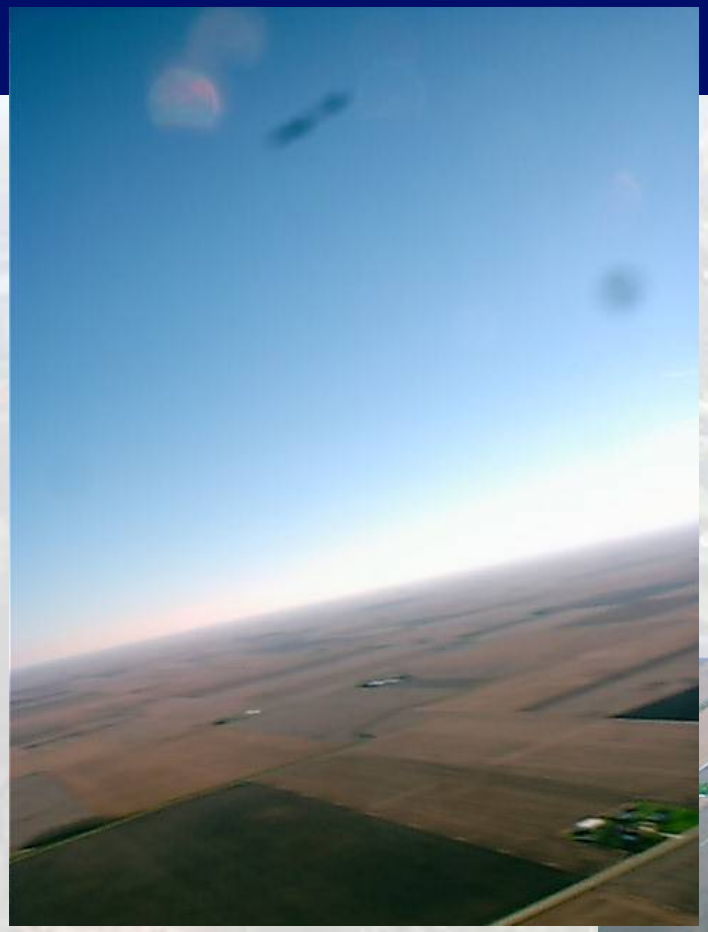

Rocket Performance: Theory

$$V_R^{cst\,mass}(t) = \frac{T\,t_b}{m_{Ro}}\,\frac{t}{t_b}$$

$$V_R^{var\,mass}(t) = -\frac{T\,t_b}{m_{SPo}}\,ln\left(1-\frac{m_{SPo}}{m_{Ro}}\,\frac{t}{t_b}\right)$$

$$\frac{V_R^{var\,mass}}{V_R^{cst\,mass}} = -\frac{1}{\eta}\,\frac{ln(1-\eta t')}{t'}$$

where $\eta = \frac{m_{SPo}}{m_{Ro}}$ and $t' = \frac{t}{t_b}$

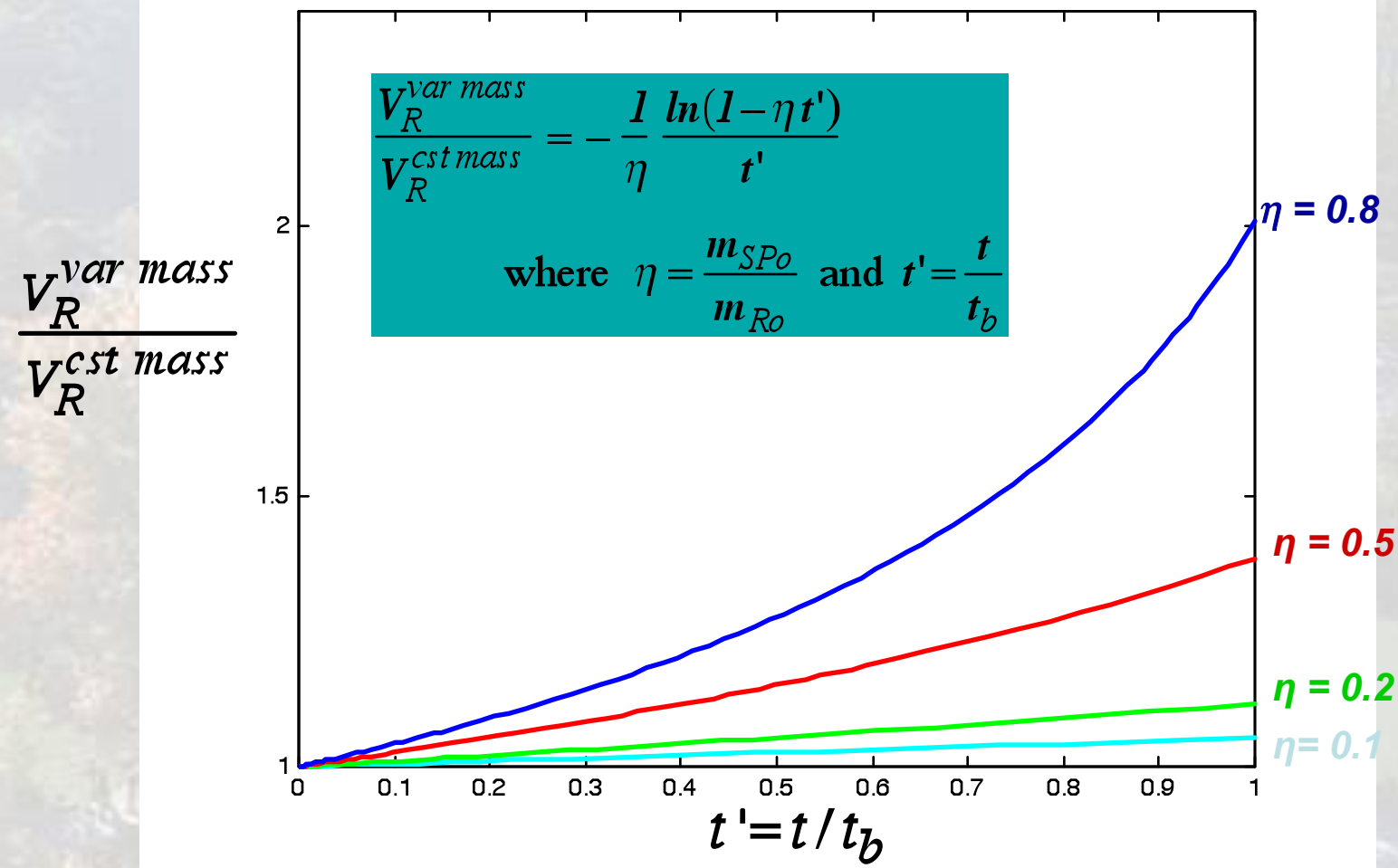

Rocket Performance: Numerics

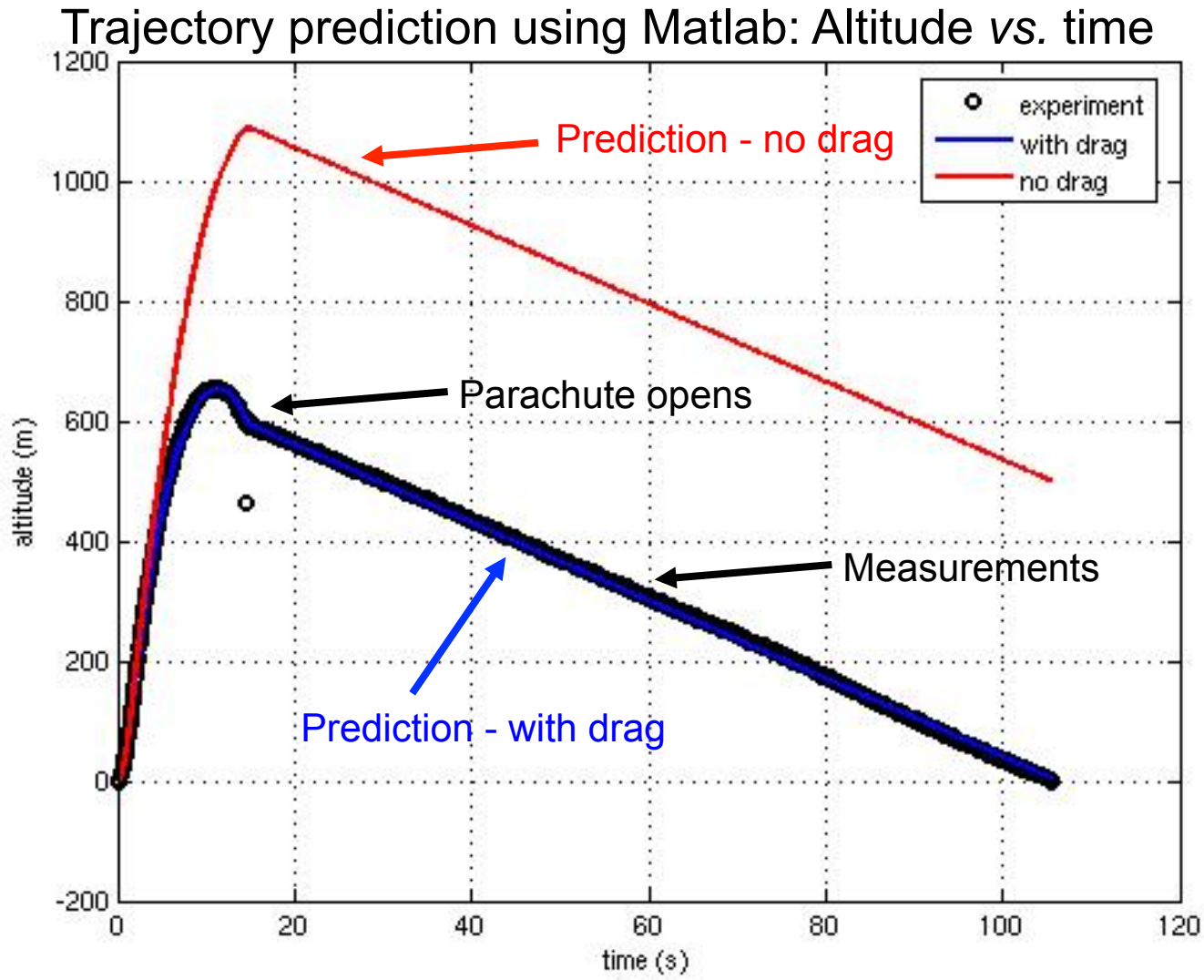

Flight Data Processing

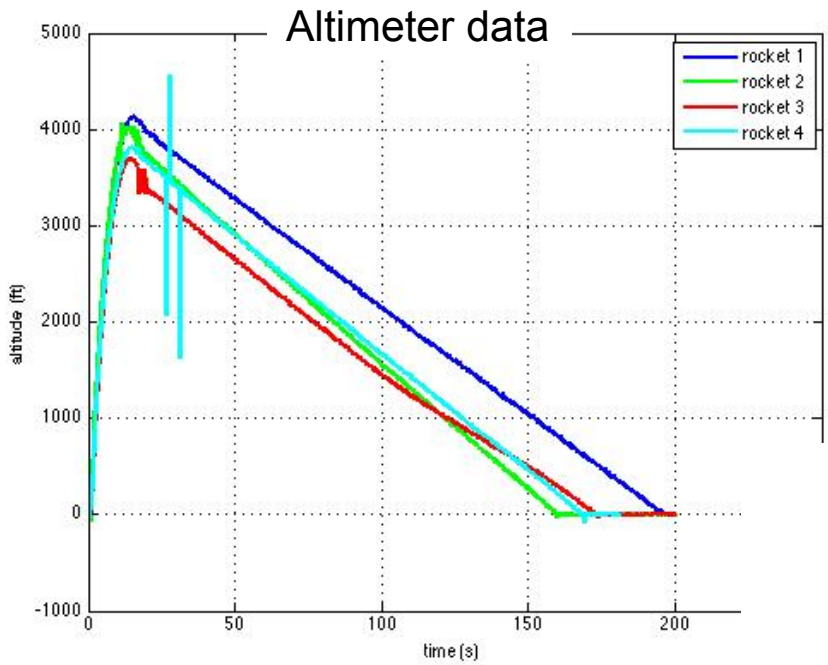

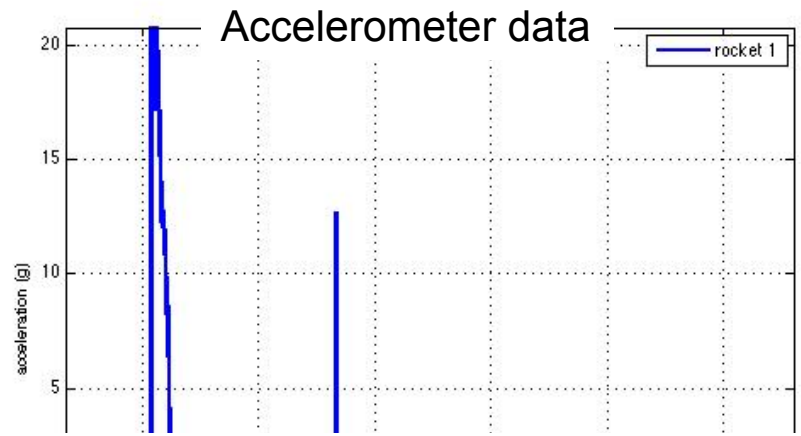

Numerical processing
- Data smoothing
- Numerical differentiation
- Numerical integration

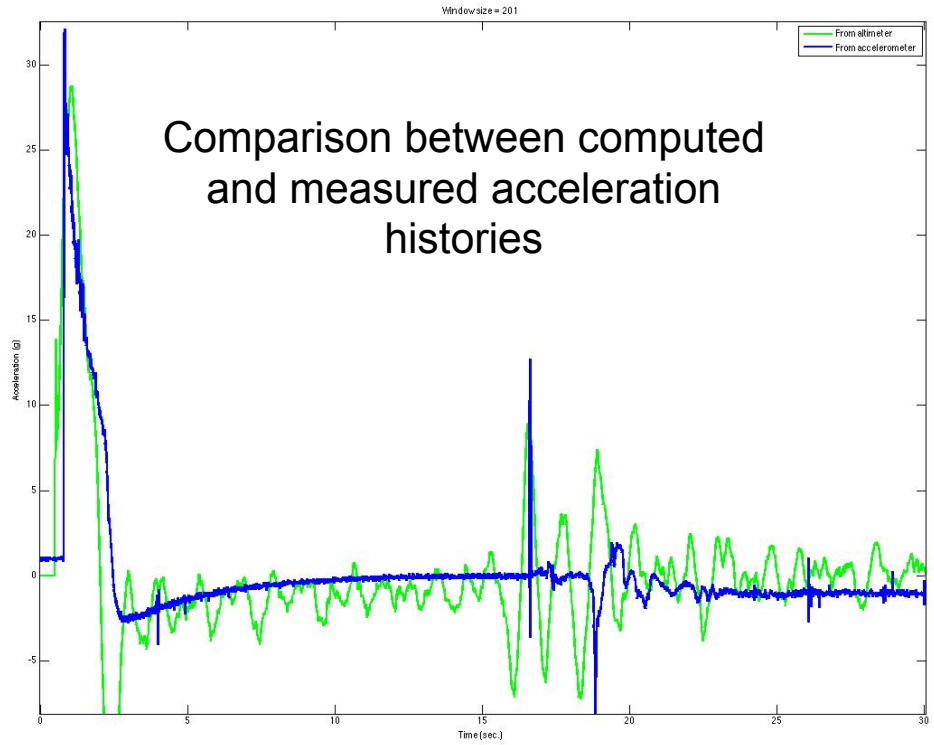

Comparison between computed and measured acceleration histories

“Real” Solid Propellant Rockets

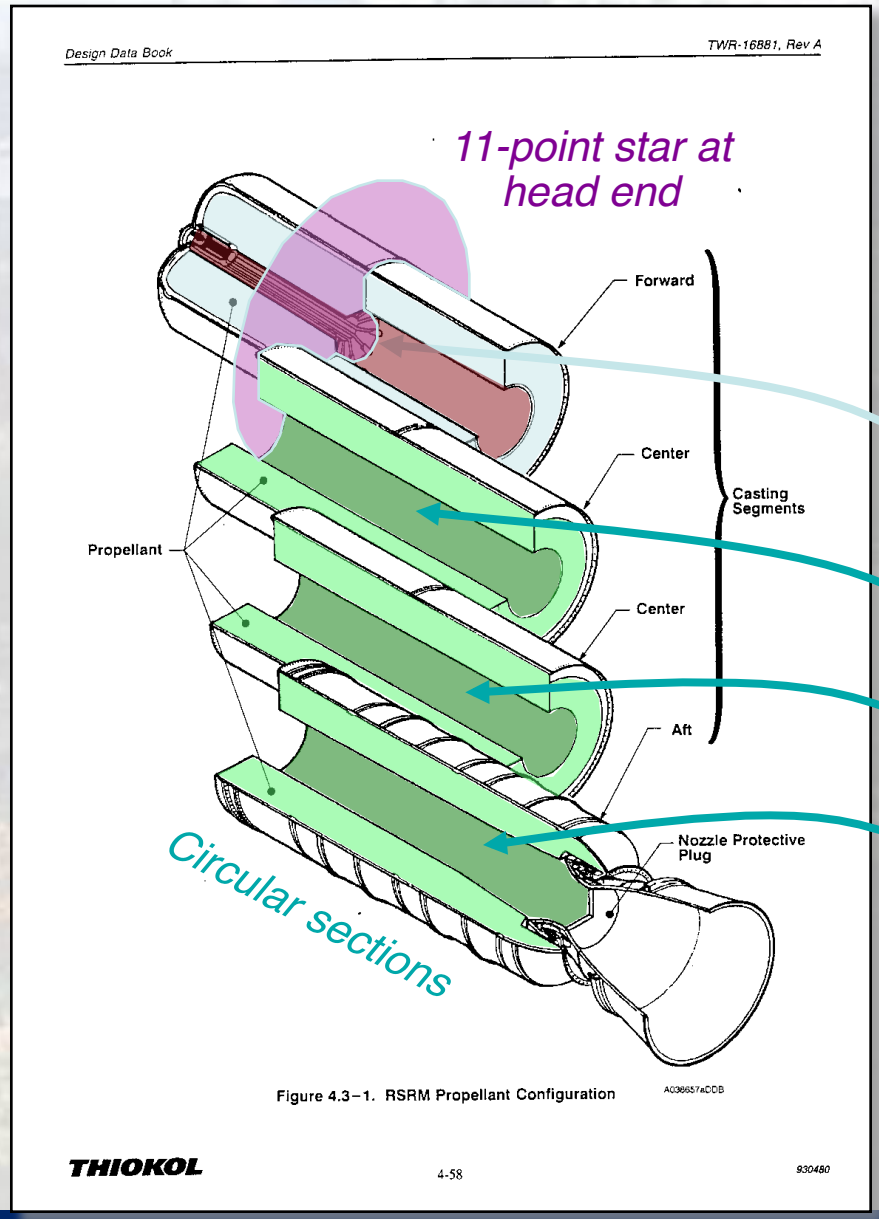

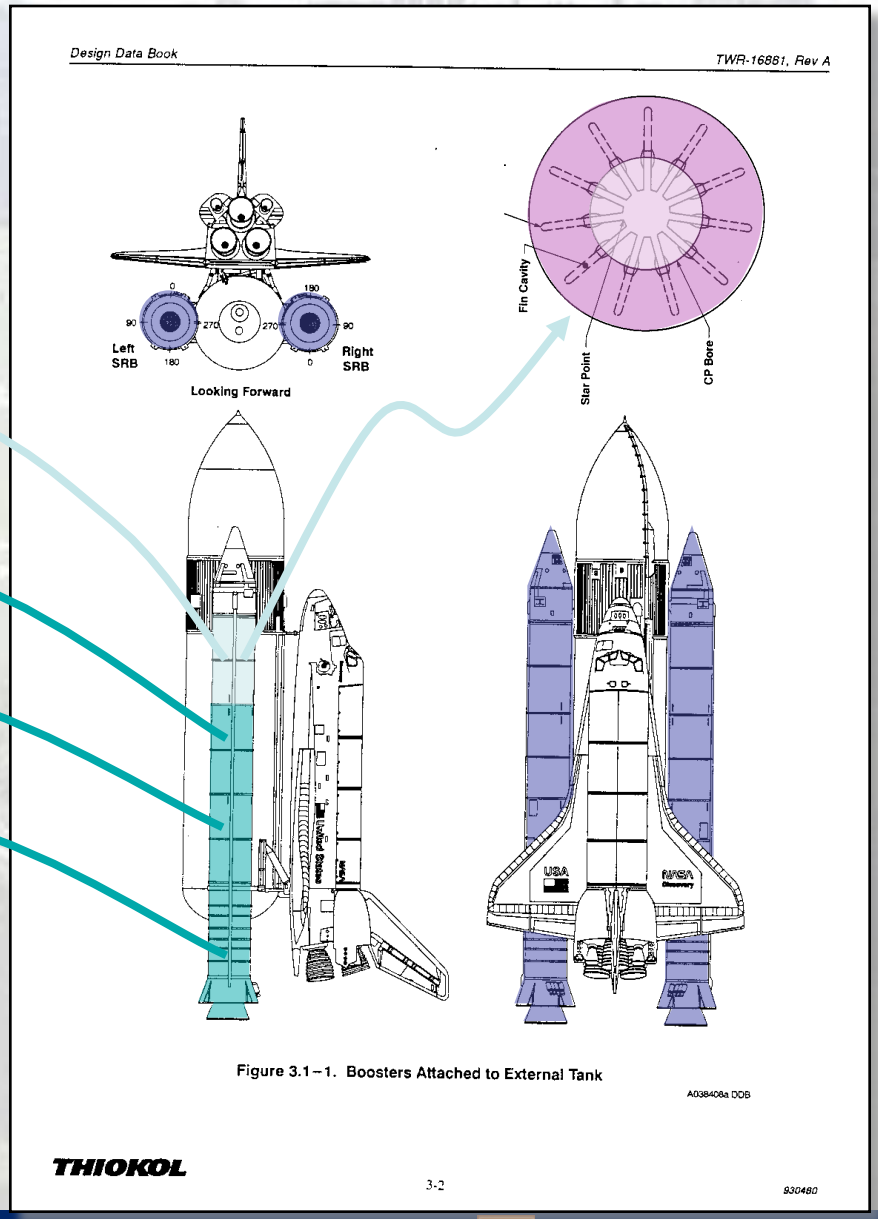

Thank you

geubelle@illinois.edu